Deep groove ball bearing 6202 C3 SKF

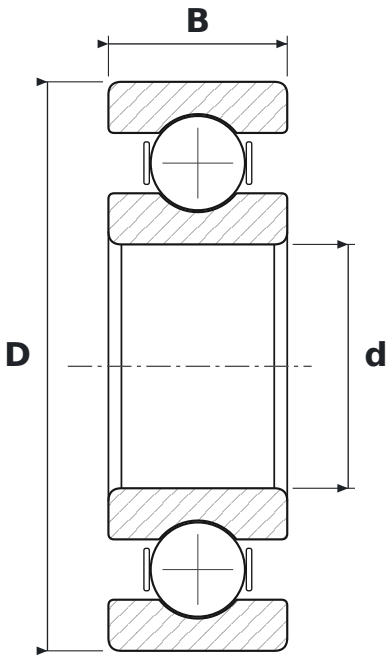

DIMENSIONS

d	bore diameter	**15 mm**
D	outside diameter	**35 mm**
B	width	**11 mm**

WHAT 6202 C3 MEANS

62	łożysko kulkowe zwykłe (6), seria średnic 2 – lekka
C3	radial clearance greater than normal

SPECIFICATIONS

Manufacturer	**SKF**
Manufacturer designation	**6202 C3**
Rolling elements	**single-row ball bearing**
Basic dynamic load rating C	**8.06 kN**
Basic static load rating C0	**3.75 kN**