CASTOMER

DATASHEET

# Deep groove ball bearing 6202-ZZ TIMKEN

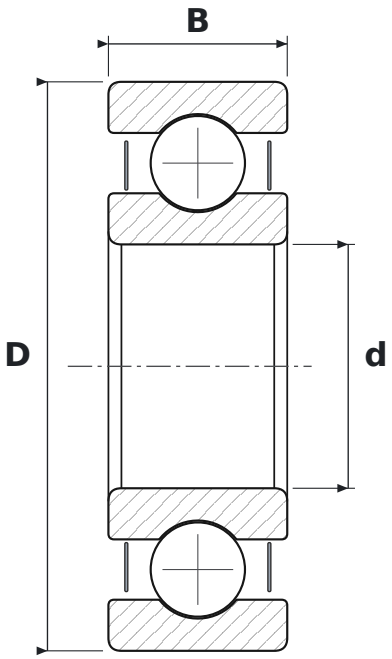


## DIMENSIONS

| | | |
|---|---|---|
| **d** | bore diameter | **15 mm** |
| **D** | outside diameter | **35 mm** |
| **B** | width | **11 mm** |

## WHAT 6202-ZZ MEANS

| | |
|---|---|
| **62** | łożysko kulkowe zwykłe (6), seria średnic 2 – lekka |
| **ZZ** | blaszki ochronne, dwustronne |

## SPECIFICATIONS

| | |
|---|---|
| Manufacturer | **TIMKEN** |
| Manufacturer designation | **6202-ZZ** |
| Rolling elements | **single-row ball bearing** |