Deep groove ball bearing 6202 ZZC3 KOYO

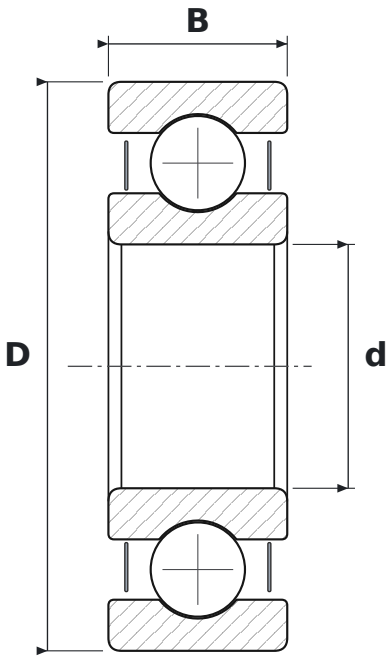

DIMENSIONS

d	bore diameter	**15 mm**
D	outside diameter	**35 mm**
B	width	**11 mm**

WHAT 6202 ZZC3 MEANS

62	łożysko kulkowe zwykłe (6), seria średnic 2 – lekka
ZZ	blaszki ochronne, dwustronne
C3	radial clearance greater than normal

SPECIFICATIONS

Manufacturer	**KOYO**
Manufacturer designation	**6202 ZZC3**
Rolling elements	**single-row ball bearing**