Deep groove ball bearing 6203-2RS-ID5/8 ZEN

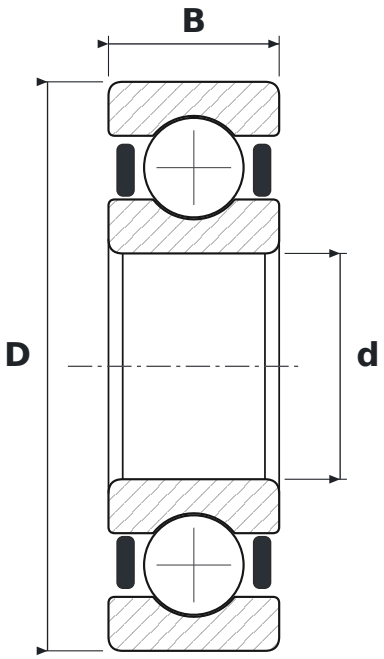

DIMENSIONS

d	bore diameter	**15.88 mm**
D	outside diameter	**40 mm**
B	width	**12 mm**

SPECIFICATIONS

Manufacturer	**ZEN**
Manufacturer designation	**6203-2RS-ID5/8**
Rolling elements	**single-row ball bearing**
2RS	**uszczelnienia stykowe z gumy syntetycznej, dwustronne (od −20 do +110 °C)**
Radial internal clearance	**CN – normal**