CASTOMER

DATASHEET

Deep groove ball bearing 6203-2RSHC3 SKF

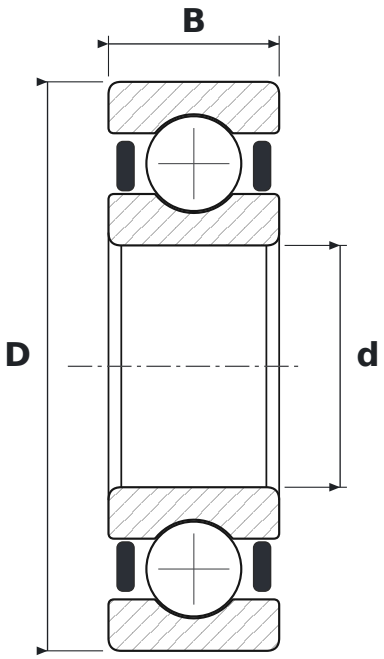

DIMENSIONS

d	bore diameter	**17 mm**
D	outside diameter	**40 mm**
B	width	**12 mm**

WHAT 6203-2RSHC3 MEANS

62	łożysko kulkowe zwykłe (6), seria średnic 2 – lekka
2RSH	uszczelnienia stykowe z kauczuku NBR wzmocnione blachą stalową, dwustronne
C3	radial clearance greater than normal

SPECIFICATIONS

Manufacturer	**SKF**
Manufacturer designation	**6203-2RSHC3**
Rolling elements	**single-row ball bearing**
Basic dynamic load rating C	**9.95 kN**
Basic static load rating C0	**4.75 kN**
Mass	**0.065 kg**