Deep groove ball bearing 6203-2ZC3 NKE

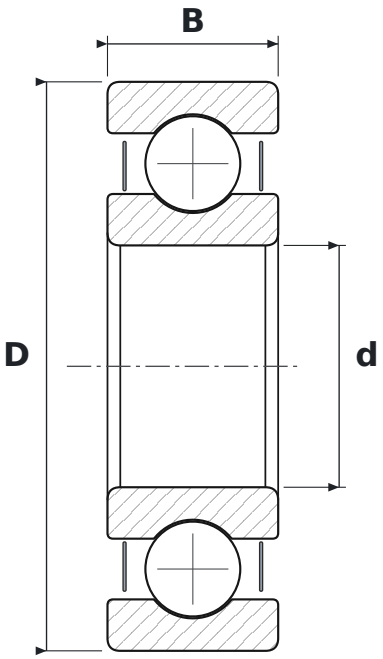

DIMENSIONS

d	bore diameter	**17 mm**
D	outside diameter	**40 mm**
B	width	**12 mm**

WHAT 6203-2ZC3 MEANS

62	łożysko kulkowe zwykłe (6), seria średnic 2 – lekka
2Z	steel shields, both sides
C3	radial clearance greater than normal

SPECIFICATIONS

Manufacturer	**NKE**
Manufacturer designation	**6203-2ZC3**
Rolling elements	**single-row ball bearing**
Mass	**0.065 kg**