Deep groove ball bearing 6203 C4 SKF

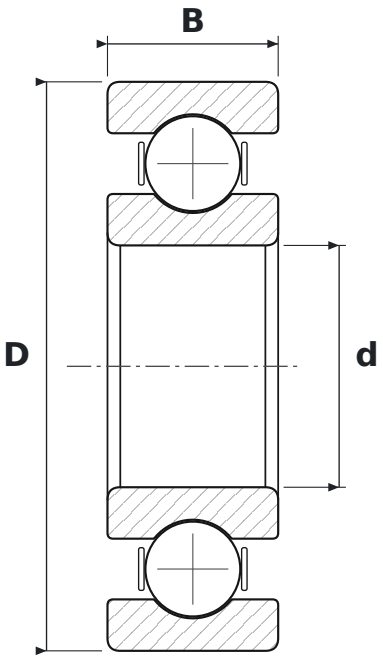

DIMENSIONS

d	bore diameter	**17 mm**
D	outside diameter	**40 mm**
B	width	**12 mm**

WHAT 6203 C4 MEANS

62	łożysko kulkowe zwykłe (6), seria średnic 2 – lekka
C4	large radial clearance

SPECIFICATIONS

Manufacturer	**SKF**
Manufacturer designation	**6203 C4**
Rolling elements	**single-row ball bearing**
Basic dynamic load rating C	**9.95 kN**
Basic static load rating C0	**4.75 kN**
Mass	**0.063 kg**