Deep groove ball bearing 6203 NR SNR

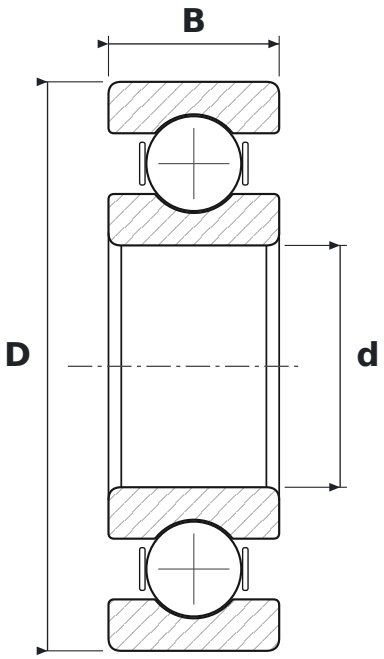

DIMENSIONS

d	bore diameter	**17 mm**
D	outside diameter	**40 mm**
B	width	**12 mm**

WHAT 6203 NR MEANS

62	łożysko kulkowe zwykłe (6), seria średnic 2 – lekka
NR	snap ring groove with snap ring

SPECIFICATIONS

Manufacturer	**SNR**
Manufacturer designation	**6203 NR**
Rolling elements	**single-row ball bearing**