Deep groove ball bearing 6203 TBP63 FAG

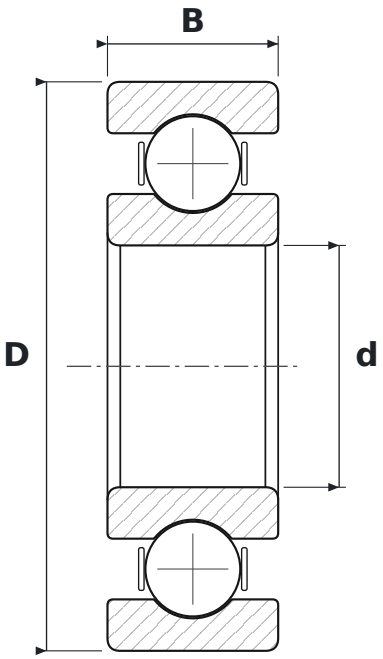

DIMENSIONS

d	bore diameter	**17 mm**
D	outside diameter	**40 mm**
B	width	**12 mm**

SPECIFICATIONS

Manufacturer	**FAG**
Manufacturer designation	**6203 TBP63**
Rolling elements	**single-row ball bearing**
B	**40° contact angle**
P6	**tolerance class P6**
Seal	**open – no seals**
Radial internal clearance	**CN – normal**
Mass	**0.062 kg**