Deep groove ball bearing 6203-ZZ TIMKEN

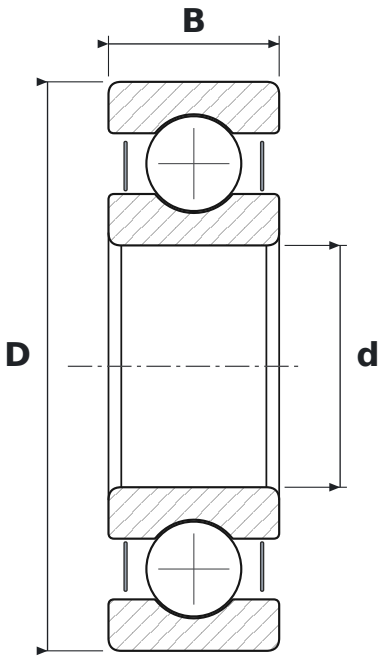

DIMENSIONS

d	bore diameter	**17 mm**
D	outside diameter	**40 mm**
B	width	**12 mm**

WHAT 6203-ZZ MEANS

62	łożysko kulkowe zwykłe (6), seria średnic 2 – lekka
ZZ	blaszki ochronne, dwustronne

SPECIFICATIONS

Manufacturer	**TIMKEN**
Manufacturer designation	**6203-ZZ**
Rolling elements	**single-row ball bearing**