CASTOMER

DATASHEET

Deep groove ball bearing 6204-2RSHC3 SKF

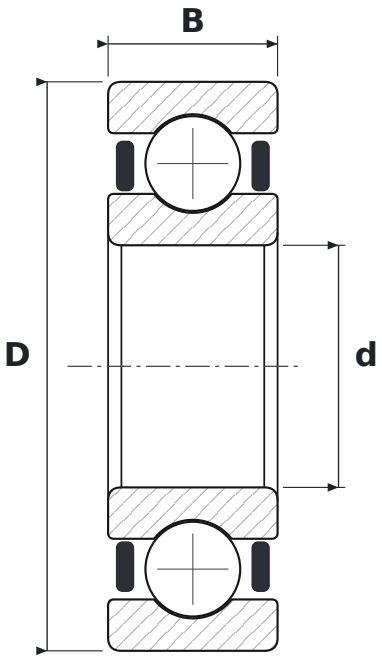

DIMENSIONS

d	bore diameter	**20 mm**
D	outside diameter	**47 mm**
B	width	**14 mm**

WHAT 6204-2RSHC3 MEANS

62	łożysko kulkowe zwykłe (6), seria średnic 2 – lekka
2RSH	uszczelnienia stykowe z kauczuku NBR wzmocnione blachą stalową, dwustronne
C3	radial clearance greater than normal

SPECIFICATIONS

Manufacturer	**SKF**
Manufacturer designation	**6204-2RSHC3**
Rolling elements	**single-row ball bearing**
Basic dynamic load rating C	**13.5 kN**
Basic static load rating C0	**6.55 kN**
Mass	**0.106 kg**