Deep groove ball bearing 6204-2ZNR ZEN

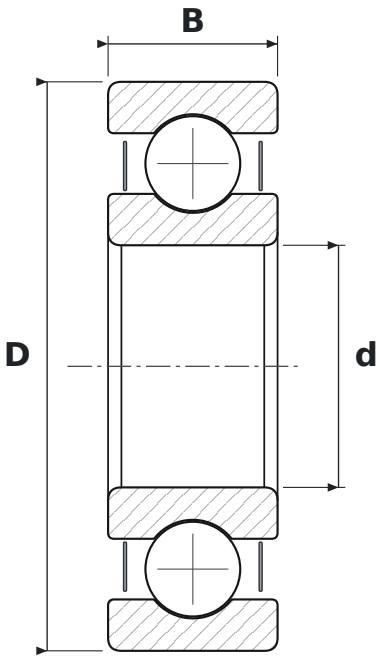

DIMENSIONS

d	bore diameter	**20 mm**
D	outside diameter	**47 mm**
B	width	**14 mm**

WHAT 6204-2ZNR MEANS

62	łożysko kulkowe zwykłe (6), seria średnic 2 – lekka
2Z	steel shields, both sides
NR	snap ring groove with snap ring

SPECIFICATIONS

Manufacturer	**ZEN**
Manufacturer designation	**6204-2ZNR**
Rolling elements	**single-row ball bearing**
Mass	**0.101 kg**