Deep groove ball bearing 6204-C-Z FAG

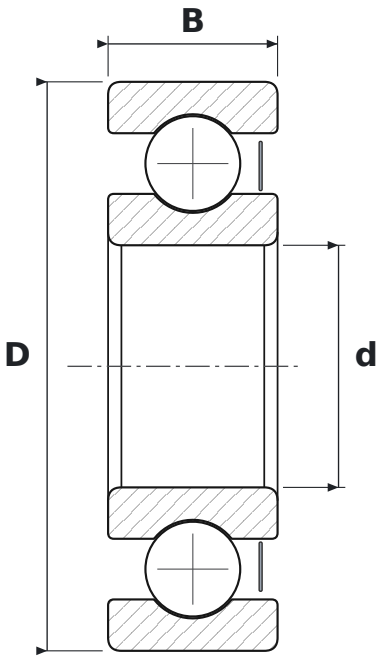

DIMENSIONS

d	bore diameter	**20 mm**
D	outside diameter	**47 mm**
B	width	**14 mm**

WHAT 6204-C-Z MEANS

62	łożysko kulkowe zwykłe (6), seria średnic 2 – lekka
C	generation C – revised internal design (FAG)
Z	steel shield, one side

SPECIFICATIONS

Manufacturer	**FAG**
Manufacturer designation	**6204-C-Z**
Rolling elements	**single-row ball bearing**
Mass	**0.124 kg**