Deep groove ball bearing 6204 ZZC3 SNR

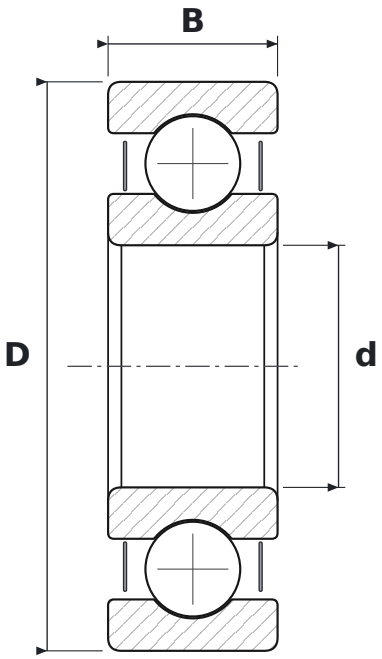

DIMENSIONS

d	bore diameter	**20 mm**
D	outside diameter	**47 mm**
B	width	**14 mm**

WHAT 6204 ZZC3 MEANS

62	łożysko kulkowe zwykłe (6), seria średnic 2 – lekka
ZZ	blaszki ochronne, dwustronne
C3	radial clearance greater than normal

SPECIFICATIONS

Manufacturer	**SNR**
Manufacturer designation	**6204 ZZC3**
Rolling elements	**single-row ball bearing**