Deep groove ball bearing 6204-ZZNR2AS NTN

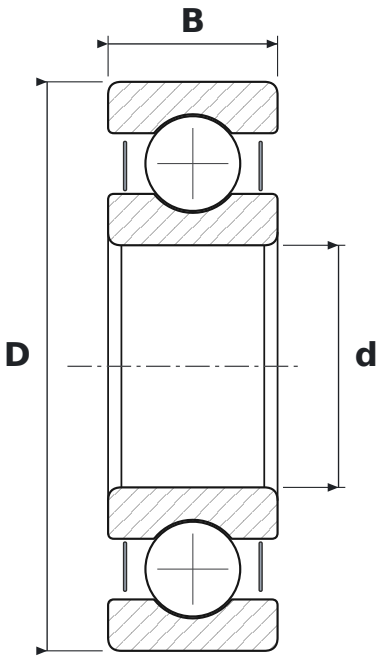

DIMENSIONS

d	bore diameter	**20 mm**
D	outside diameter	**47 mm**
B	width	**14 mm**

WHAT 6204-ZZNR2AS MEANS

62	łożysko kulkowe zwykłe (6), seria średnic 2 – lekka
ZZ	blaszki ochronne, dwustronne
NR	snap ring groove with snap ring
2AS	smar Shell Alvania S2 (od −25 do +120 °C)

SPECIFICATIONS

Manufacturer	**NTN**
Manufacturer designation	**6204-ZZNR2AS**
Rolling elements	**single-row ball bearing**
Mass	**0.11 kg**