Deep groove ball bearing 6205-2NSE9C3 INNE

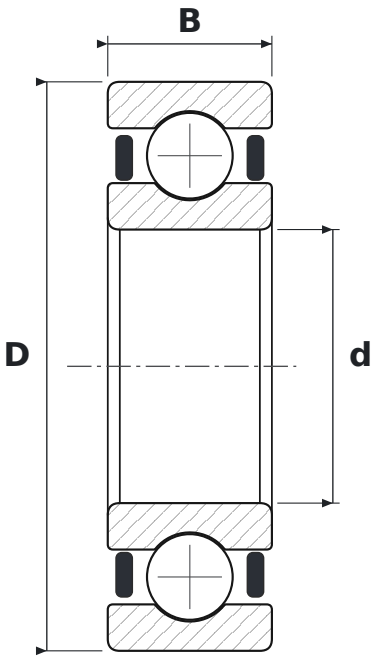

DIMENSIONS

d	bore diameter	**25 mm**
D	outside diameter	**52 mm**
B	width	**15 mm**

SPECIFICATIONS

Manufacturer	**INNE**
Manufacturer designation	**6205-2NSE9C3**
Rolling elements	**single-row ball bearing**
2RS	**contact rubber seals, both sides**
C3	**radial clearance greater than normal**
Mass	**0.13 kg**