Deep groove ball bearing 6205-Z-C2-C3 FAG

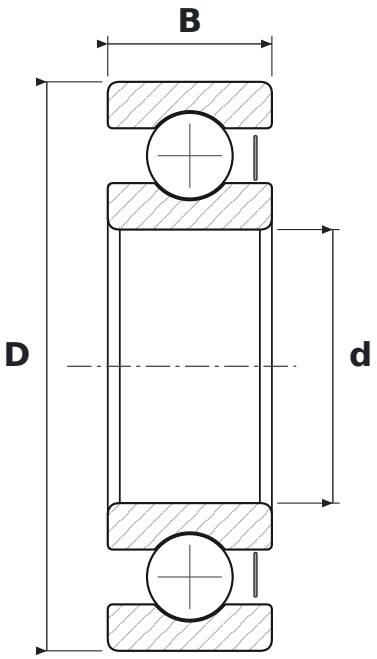

DIMENSIONS

d	bore diameter	**25 mm**
D	outside diameter	**52 mm**
B	width	**15 mm**

WHAT 6205-Z-C2-C3 MEANS

62	łożysko kulkowe zwykłe (6), seria średnic 2 – lekka
Z	steel shield, one side
C2	radial clearance smaller than normal
C3	radial clearance greater than normal

SPECIFICATIONS

Manufacturer	**FAG**
Manufacturer designation	**6205-Z-C2-C3**
Rolling elements	**single-row ball bearing**