Deep groove ball bearing 6205-DDUC3 NSK

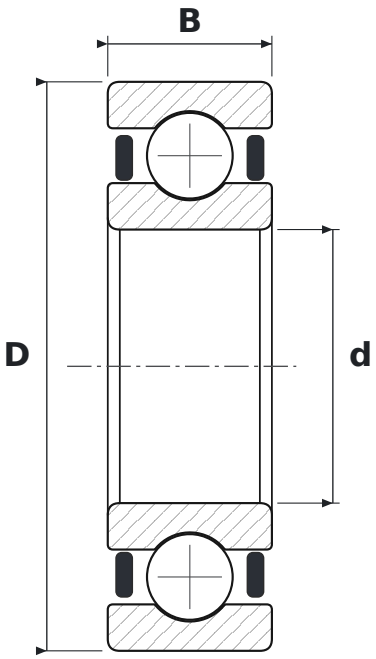

DIMENSIONS

d	bore diameter	**25 mm**
D	outside diameter	**52 mm**
B	width	**15 mm**

WHAT 6205-DDUC3 MEANS

62	łożysko kulkowe zwykłe (6), seria średnic 2 – lekka
DDU	uszczelnienia gumowe stykowe (standardowo kauczuk nitrylowy NBR), dwustronne, od −10 do +100 °C
C3	radial clearance greater than normal

SPECIFICATIONS

Manufacturer	**NSK**
Manufacturer designation	**6205-DDUC3**
Rolling elements	**single-row ball bearing**
Mass	**0.128 kg**