Deep groove ball bearing 6205-ZZ-C3 TIMKEN

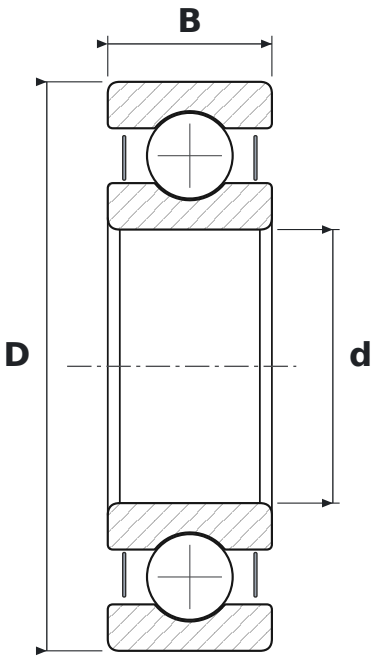

DIMENSIONS

d	bore diameter	**25 mm**
D	outside diameter	**52 mm**
B	width	**15 mm**

WHAT 6205-ZZ-C3 MEANS

62	łożysko kulkowe zwykłe (6), seria średnic 2 – lekka
ZZ	blaszki ochronne, dwustronne
C3	radial clearance greater than normal

SPECIFICATIONS

Manufacturer	**TIMKEN**
Manufacturer designation	**6205-ZZ-C3**
Rolling elements	**single-row ball bearing**