Deep groove ball bearing 6206-2Z/C3WT SKF

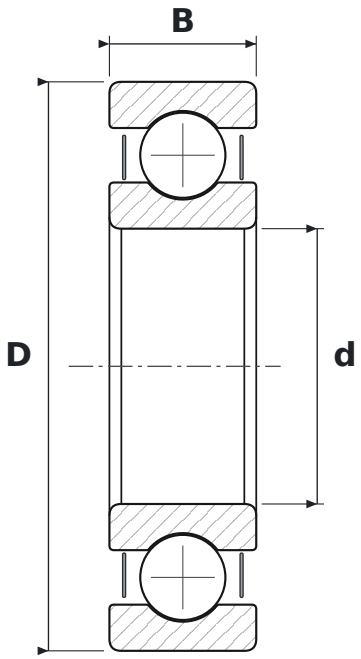

DIMENSIONS

d	bore diameter	**30 mm**
D	outside diameter	**62 mm**
B	width	**16 mm**

WHAT 6206-2Z/C3WT MEANS

62	łożysko kulkowe zwykłe (6), seria średnic 2 – lekka
2Z	steel shields, both sides
C3	radial clearance greater than normal
WT	smar o szerokim zakresie temperatur: zagęszczacz polimocznikowy, olej estrowy, NLGI 2–3

SPECIFICATIONS

Manufacturer	**SKF**
Manufacturer designation	**6206-2Z/C3WT**
Rolling elements	**single-row ball bearing**
Basic dynamic load rating C	**20.3 kN**
Basic static load rating C0	**11.2 kN**