Deep groove ball bearing 6206-2ZC3 ZEN

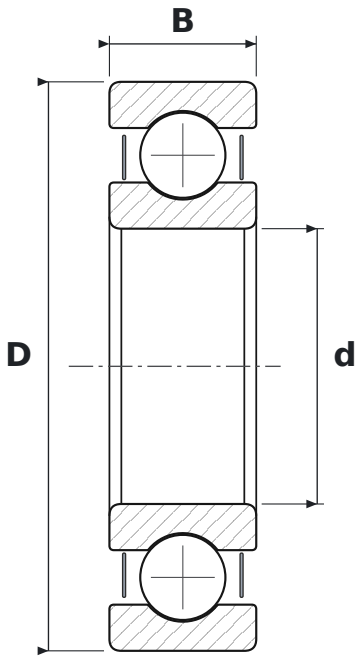

DIMENSIONS

d	bore diameter	**30 mm**
D	outside diameter	**62 mm**
B	width	**16 mm**

WHAT 6206-2ZC3 MEANS

62	łożysko kulkowe zwykłe (6), seria średnic 2 – lekka
2Z	steel shields, both sides
C3	radial clearance greater than normal

SPECIFICATIONS

Manufacturer	**ZEN**
Manufacturer designation	**6206-2ZC3**
Rolling elements	**single-row ball bearing**