Deep groove ball bearing 6206-C-C3 FAG

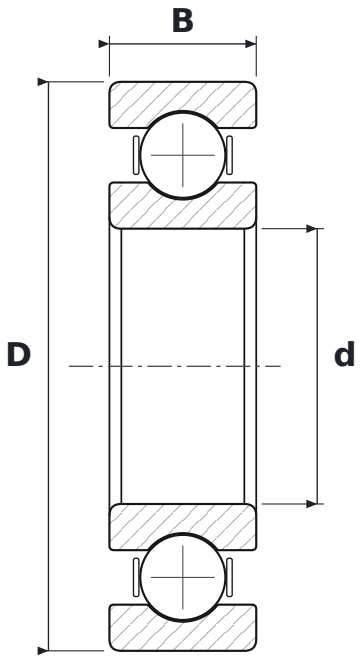

DIMENSIONS

d	bore diameter	**30 mm**
D	outside diameter	**62 mm**
B	width	**16 mm**

WHAT 6206-C-C3 MEANS

62	łożysko kulkowe zwykłe (6), seria średnic 2 – lekka
C	generation C – revised internal design (FAG)
C3	radial clearance greater than normal

SPECIFICATIONS

Manufacturer	**FAG**
Manufacturer designation	**6206-C-C3 (-C3)**
Rolling elements	**single-row ball bearing**