Deep groove ball bearing 6206 G15C4 SNR

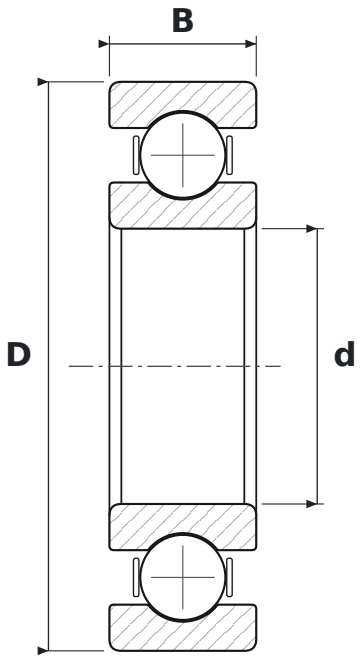

DIMENSIONS

d	bore diameter	**30 mm**
D	outside diameter	**62 mm**
B	width	**16 mm**

WHAT 6206 G15C4 MEANS

62	łożysko kulkowe zwykłe (6), seria średnic 2 – lekka
G15	koszyk poliamidowy wzmocniony włóknem szklanym
C4	large radial clearance

SPECIFICATIONS

Manufacturer	**SNR**
Manufacturer designation	**6206 G15C4**
Rolling elements	**single-row ball bearing**
Mass	**0.186 kg**