Deep groove ball bearing 6206 NSE9C3 NACHI

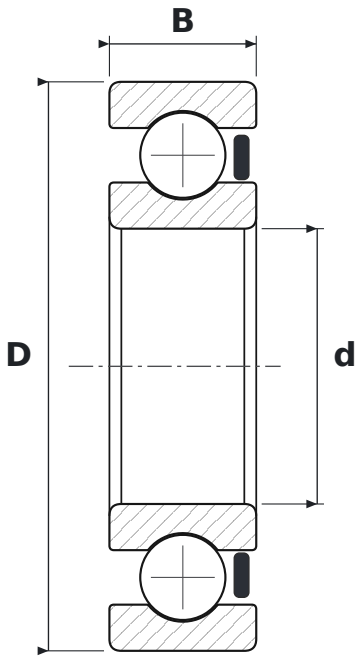

DIMENSIONS

d	bore diameter	**30 mm**
D	outside diameter	**62 mm**
B	width	**16 mm**

SPECIFICATIONS

Manufacturer	**NACHI**
Manufacturer designation	**6206 NSE9C3**
Rolling elements	**single-row ball bearing**
RS	**contact rubber seal, one side**
C3	**radial clearance greater than normal**