Deep groove ball bearing 6206-SQ205B NKE

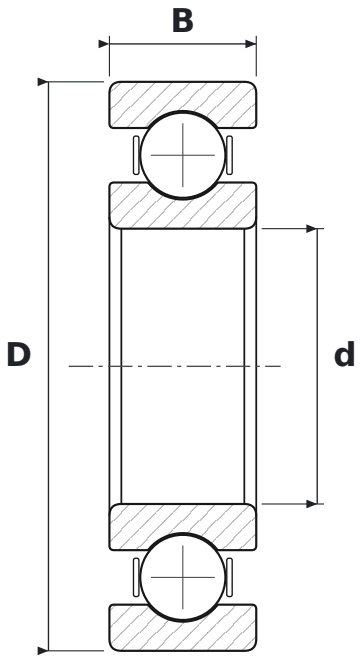

DIMENSIONS

d	bore diameter	**30 mm**
D	outside diameter	**62 mm**
B	width	**16 mm**

SPECIFICATIONS

Manufacturer	**NKE**
Manufacturer designation	**6206-SQ205B**
Rolling elements	**single-row ball bearing**
Seal	**open – no seals**
Radial internal clearance	**CN – normal**