Deep groove ball bearing 6206-ZZENRCM INNE

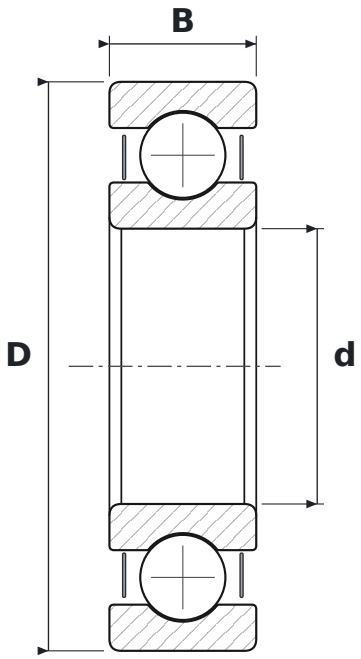

DIMENSIONS

d	bore diameter	**30 mm**
D	outside diameter	**62 mm**
B	width	**16 mm**

WHAT 6206-ZZENRCM MEANS

62	łożysko kulkowe zwykłe (6), seria średnic 2 – lekka
ZZ	blaszki ochronne, dwustronne
E	reinforced design, higher load rating
NR	snap ring groove with snap ring
CM	clearance for electric motors (quiet running)

SPECIFICATIONS

Manufacturer	**INNE**
Manufacturer designation	**6206-ZZENRCM**
Rolling elements	**single-row ball bearing**
Mass	**0.19 kg**