Deep groove ball bearing 6206 ZZNR NSK

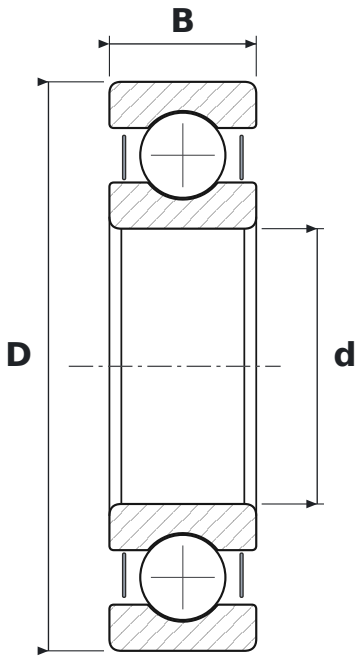

DIMENSIONS

d	bore diameter	**30 mm**
D	outside diameter	**62 mm**
B	width	**16 mm**

WHAT 6206 ZZNR MEANS

62	łożysko kulkowe zwykłe (6), seria średnic 2 – lekka
ZZ	blaszki ochronne, dwustronne
NR	snap ring groove with snap ring

SPECIFICATIONS

Manufacturer	**NSK**
Manufacturer designation	**6206 ZZNR**
Rolling elements	**single-row ball bearing**