CASTOMER

DATASHEET

Deep groove ball bearing 6207-2RS TIMKEN

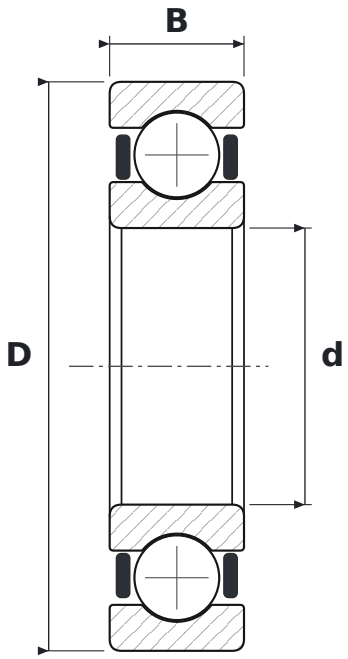

DIMENSIONS

d	bore diameter	**35 mm**
D	outside diameter	**72 mm**
B	width	**17 mm**

WHAT 6207-2RS MEANS

62	łożysko kulkowe zwykłe (6), seria średnic 2 – lekka
2RS	contact rubber seals, both sides

SPECIFICATIONS

Manufacturer	**TIMKEN**
Manufacturer designation	**6207-2RS**
Rolling elements	**single-row ball bearing**