Deep groove ball bearing 6207 EEC3 SNR

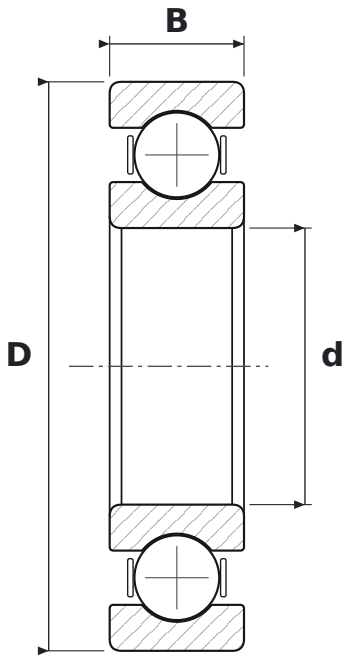

DIMENSIONS

d	bore diameter	**35 mm**
D	outside diameter	**72 mm**
B	width	**17 mm**

WHAT 6207 EEC3 MEANS

62	łożysko kulkowe zwykłe (6), seria średnic 2 – lekka
EE	uszczelnienia stykowe, dwustronne
C3	radial clearance greater than normal

SPECIFICATIONS

Manufacturer	**SNR**
Manufacturer designation	**6207 EEC3**
Rolling elements	**single-row ball bearing**