Deep groove ball bearing 6207-ZC3 NKE

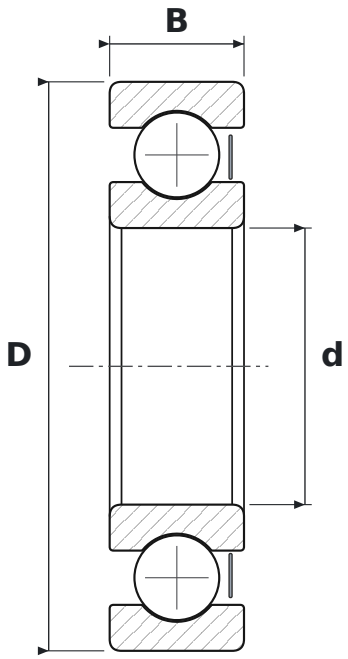

DIMENSIONS

d	bore diameter	**35 mm**
D	outside diameter	**72 mm**
B	width	**17 mm**

WHAT 6207-ZC3 MEANS

62	łożysko kulkowe zwykłe (6), seria średnic 2 – lekka
Z	steel shield, one side
C3	radial clearance greater than normal

SPECIFICATIONS

Manufacturer	**NKE**
Manufacturer designation	**6207-ZC3**
Rolling elements	**single-row ball bearing**
Mass	**0.28 kg**