Deep groove ball bearing 6207-2Z/C3GJN SKF

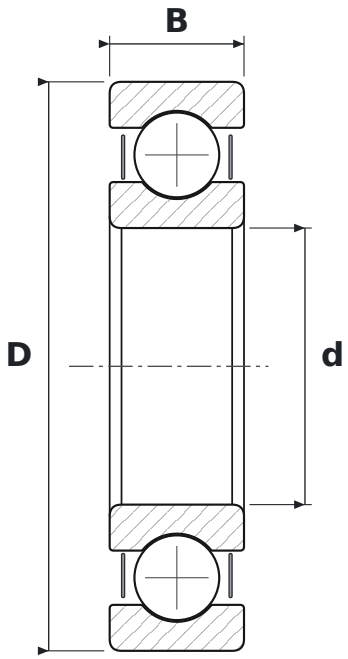

DIMENSIONS

d	bore diameter	**35 mm**
D	outside diameter	**72 mm**
B	width	**17 mm**

WHAT 6207-2Z/C3GJN MEANS

62	łożysko kulkowe zwykłe (6), seria średnic 2 – lekka
2Z	steel shields, both sides
C3	radial clearance greater than normal
GJN	smar wysokotemperaturowy: zagęszczacz polimocznikowy, olej mineralny, NLGI 2

SPECIFICATIONS

Manufacturer	**SKF**
Manufacturer designation	**6207-2Z/C3GJN**
Rolling elements	**single-row ball bearing**
Basic dynamic load rating C	**27 kN**
Basic static load rating C0	**15.3 kN**
Mass	**0.293 kg**