Deep groove ball bearing 6208 NRCM NACHI

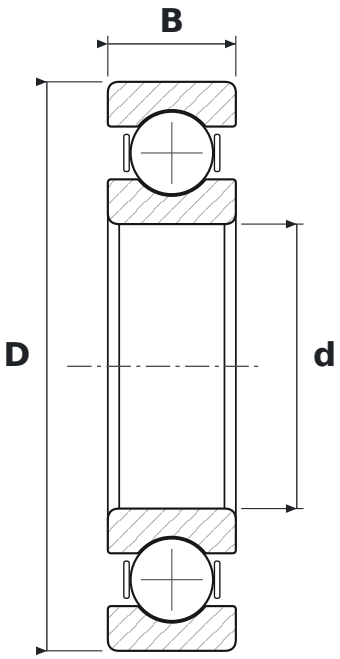

DIMENSIONS

d	bore diameter	**40 mm**
D	outside diameter	**80 mm**
B	width	**18 mm**

WHAT 6208 NRCM MEANS

62	łożysko kulkowe zwykłe (6), seria średnic 2 – lekka
NR	snap ring groove with snap ring
CM	clearance for electric motors (quiet running)

SPECIFICATIONS

Manufacturer	**NACHI**
Manufacturer designation	**6208 NRCM**
Rolling elements	**single-row ball bearing**