Deep groove ball bearing 6208-NSE9CM INNE

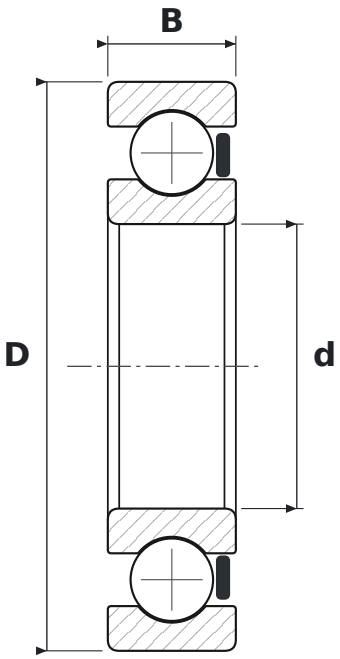

DIMENSIONS

d	bore diameter	**40 mm**
D	outside diameter	**80 mm**
B	width	**18 mm**

SPECIFICATIONS

Manufacturer	**INNE**
Manufacturer designation	**6208-NSE9CM**
Rolling elements	**single-row ball bearing**
RS	**contact rubber seal, one side**
CM	**clearance for electric motors (quiet running)**
Radial internal clearance	**CN – normal**
Mass	**0.37 kg**