CASTOMER

DATASHEET

Deep groove ball bearing 6208 RS KOYO

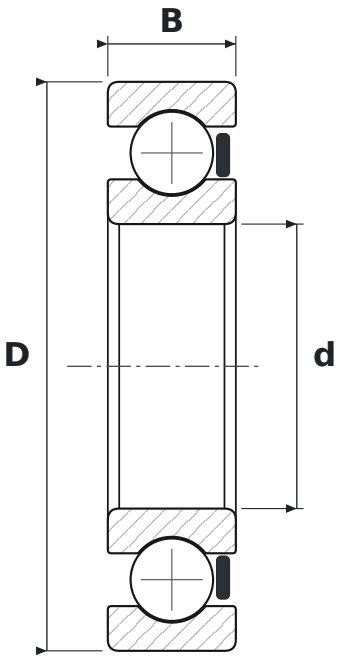

DIMENSIONS

d	bore diameter	**40 mm**
D	outside diameter	**80 mm**
B	width	**18 mm**

WHAT 6208 RS MEANS

62	łożysko kulkowe zwykłe (6), seria średnic 2 – lekka
RS	uszczelnienie stykowe, jednostronne

SPECIFICATIONS

Manufacturer	**KOYO**
Manufacturer designation	**6208 RS**
Rolling elements	**single-row ball bearing**