Deep groove ball bearing 6208-ZC3 SKF

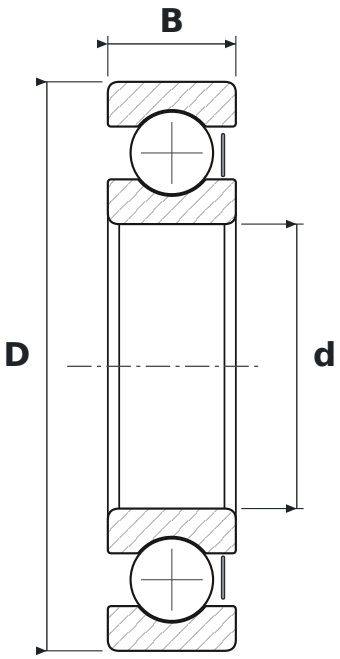

DIMENSIONS

d	bore diameter	**40 mm**
D	outside diameter	**80 mm**
B	width	**18 mm**

WHAT 6208-ZC3 MEANS

62	łożysko kulkowe zwykłe (6), seria średnic 2 – lekka
Z	steel shield, one side
C3	radial clearance greater than normal

SPECIFICATIONS

Manufacturer	**SKF**
Manufacturer designation	**6208-ZC3**
Rolling elements	**single-row ball bearing**
Basic dynamic load rating C	**32.5 kN**
Basic static load rating C0	**19 kN**
Mass	**0.357 kg**