Deep groove ball bearing 6209-2Z-C3 ZEN

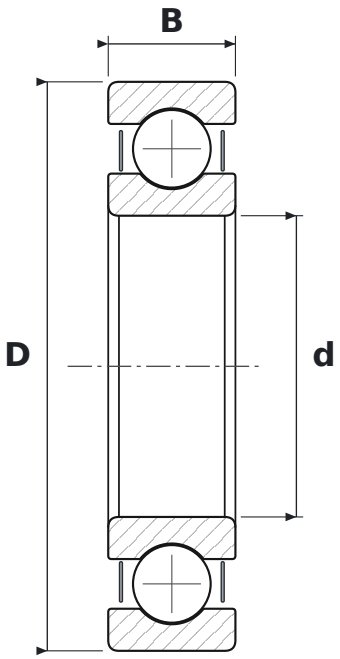

DIMENSIONS

d	bore diameter	**45 mm**
D	outside diameter	**85 mm**
B	width	**19 mm**

WHAT 6209-2Z-C3 MEANS

62	łożysko kulkowe zwykłe (6), seria średnic 2 – lekka
2Z	steel shields, both sides
C3	radial clearance greater than normal

SPECIFICATIONS

Manufacturer	**ZEN**
Manufacturer designation	**6209-2Z-C3**
Rolling elements	**single-row ball bearing**