Deep groove ball bearing 6209-C FAG

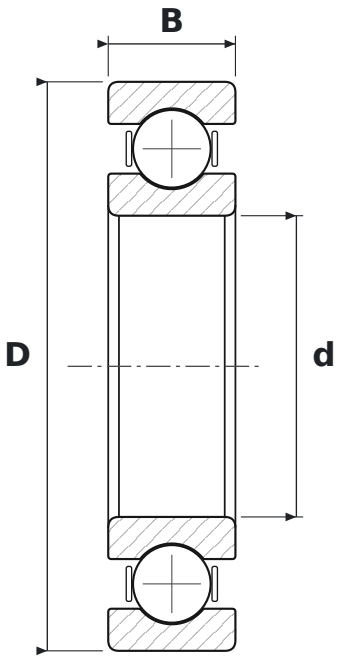

DIMENSIONS

d	bore diameter	**45 mm**
D	outside diameter	**85 mm**
B	width	**19 mm**

WHAT 6209-C MEANS

62	łożysko kulkowe zwykłe (6), seria średnic 2 – lekka
C	generation C – revised internal design (FAG)

SPECIFICATIONS

Manufacturer	**FAG**
Manufacturer designation	**6209-C**
Rolling elements	**single-row ball bearing**