Deep groove ball bearing 6209 F600 SNR

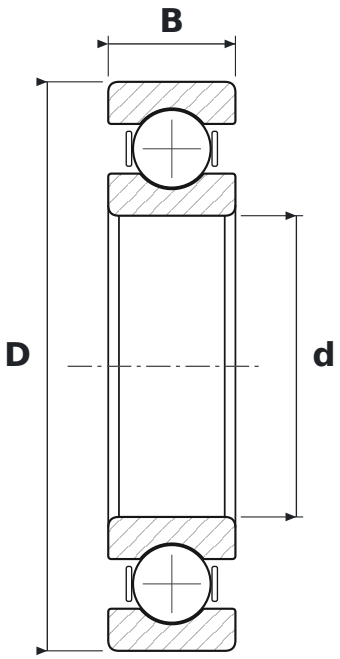

DIMENSIONS

d	bore diameter	**45 mm**
D	outside diameter	**85 mm**
B	width	**19 mm**

SPECIFICATIONS

Manufacturer	**SNR**
Manufacturer designation	**6209 F600**
Rolling elements	**single-row ball bearing**
Seal	**open – no seals**
Radial internal clearance	**CN – normal**
Mass	**0.39 kg**