Deep groove ball bearing 6210-2NSE9CM NACHI

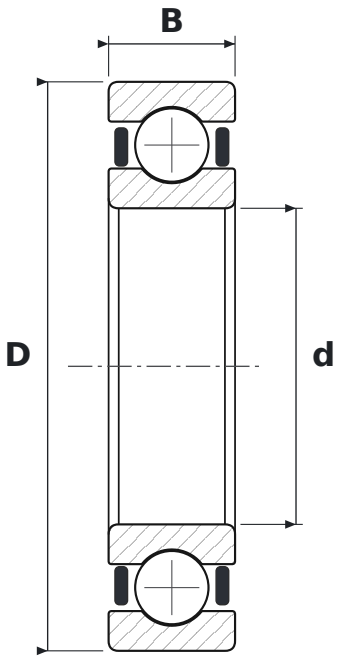

DIMENSIONS

d	bore diameter	**50 mm**
D	outside diameter	**90 mm**
B	width	**20 mm**

SPECIFICATIONS

Manufacturer	**NACHI**
Manufacturer designation	**6210-2NSE9CM**
Rolling elements	**single-row ball bearing**
2RS	**contact rubber seals, both sides**
CM	**clearance for electric motors (quiet running)**
Radial internal clearance	**CN – normal**