CASTOMER

DATASHEET

# Deep groove ball bearing 6210-2RS1C3GJN SKF

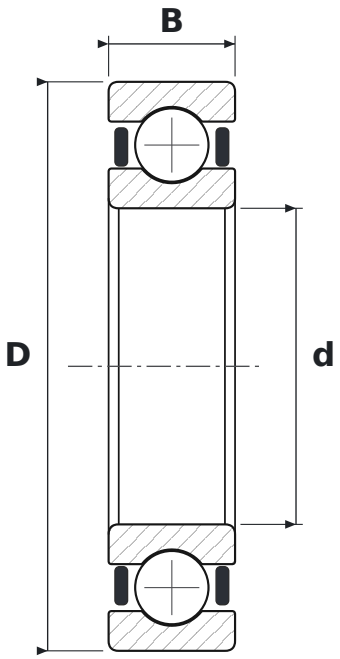


## DIMENSIONS

| | | |
|---|---|---|
| **d** | bore diameter | **50 mm** |
| **D** | outside diameter | **90 mm** |
| **B** | width | **20 mm** |

## WHAT 6210-2RS1C3GJN MEANS

| | |
|---|---|
| **62** | łożysko kulkowe zwykłe (6), seria średnic 2 – lekka |
| **2RS1** | uszczelnienia stykowe z kauczuku NBR wzmocnione blachą stalową, dwustronne |
| **C3** | radial clearance greater than normal |
| **GJN** | smar wysokotemperaturowy: zagęszczacz polimocznikowy, olej mineralny, NLGI 2 |

## SPECIFICATIONS

| | |
|---|---|
| Manufacturer | **SKF** |
| Manufacturer designation | **6210-2RS1C3GJN** |
| Rolling elements | **single-row ball bearing** |
| Basic dynamic load rating C | **37.1 kN** |
| Basic static load rating C0 | **23.2 kN** |