Deep groove ball bearing 6211 F600 SNR

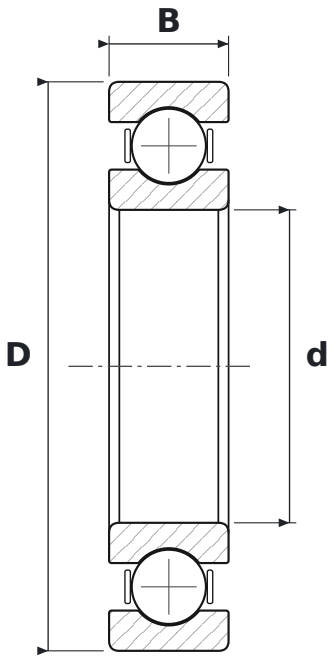

DIMENSIONS

d	bore diameter	**55 mm**
D	outside diameter	**100 mm**
B	width	**21 mm**

SPECIFICATIONS

Manufacturer	**SNR**
Manufacturer designation	**6211 F600**
Rolling elements	**single-row ball bearing**
Seal	**open – no seals**
Radial internal clearance	**CN – normal**
Mass	**0.599 kg**