Deep groove ball bearing 6211-ZZ NSK

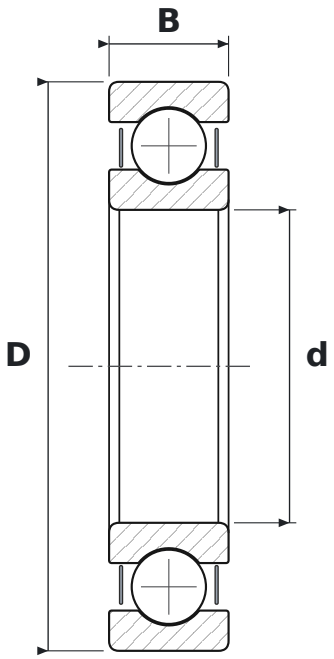

DIMENSIONS

d	bore diameter	**55 mm**
D	outside diameter	**100 mm**
B	width	**21 mm**

WHAT 6211-ZZ MEANS

62	łożysko kulkowe zwykłe (6), seria średnic 2 – lekka
ZZ	blaszki ochronne, dwustronne

SPECIFICATIONS

Manufacturer	**NSK**
Manufacturer designation	**6211-ZZ**
Rolling elements	**single-row ball bearing**
Mass	**0.618 kg**