Deep groove ball bearing 6212 C3 INNE

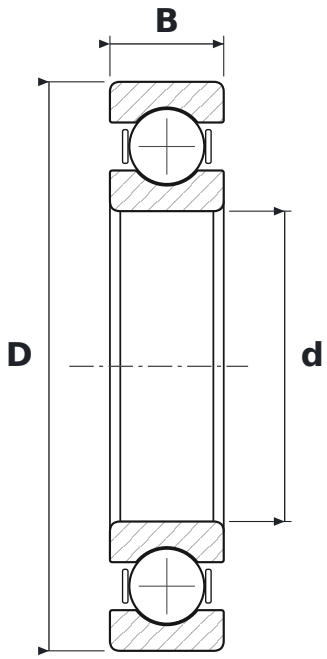

DIMENSIONS

d	bore diameter	**60 mm**
D	outside diameter	**110 mm**
B	width	**22 mm**

WHAT 6212 C3 MEANS

62	łożysko kulkowe zwykłe (6), seria średnic 2 – lekka
C3	radial clearance greater than normal

SPECIFICATIONS

Manufacturer	**INNE**
Manufacturer designation	**6212 C3**
Rolling elements	**single-row ball bearing**
Mass	**0.76 kg**