Deep groove ball bearing 6212-NSE INNE

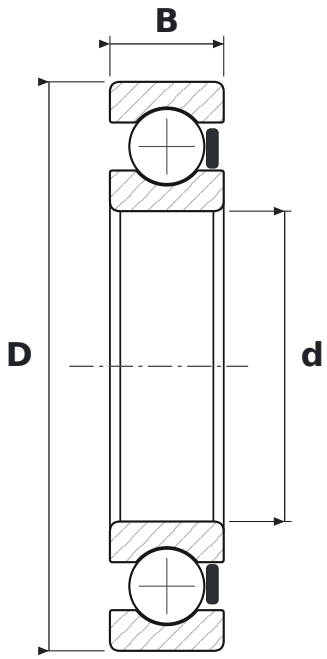

DIMENSIONS

d	bore diameter	**60 mm**
D	outside diameter	**110 mm**
B	width	**22 mm**

SPECIFICATIONS

Manufacturer	**INNE**
Manufacturer designation	**6212-NSE**
Rolling elements	**single-row ball bearing**
RS	**contact rubber seal, one side**
Radial internal clearance	**CN – normal**
Mass	**0.76 kg**