Deep groove ball bearing 6212-ZC3 NKE

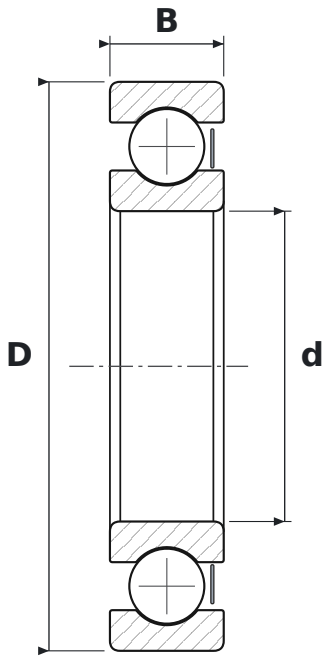

DIMENSIONS

d	bore diameter	**60 mm**
D	outside diameter	**110 mm**
B	width	**22 mm**

WHAT 6212-ZC3 MEANS

62	łożysko kulkowe zwykłe (6), seria średnic 2 – lekka
Z	steel shield, one side
C3	radial clearance greater than normal

SPECIFICATIONS

Manufacturer	**NKE**
Manufacturer designation	**6212-ZC3**
Rolling elements	**single-row ball bearing**
Mass	**0.78 kg**