Deep groove ball bearing 6212-ZZ TIMKEN

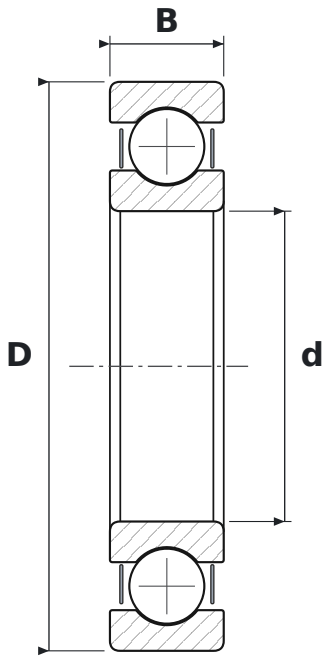

DIMENSIONS

d	bore diameter	**60 mm**
D	outside diameter	**110 mm**
B	width	**22 mm**

WHAT 6212-ZZ MEANS

62	łożysko kulkowe zwykłe (6), seria średnic 2 – lekka
ZZ	blaszki ochronne, dwustronne

SPECIFICATIONS

Manufacturer	**TIMKEN**
Manufacturer designation	**6212-ZZ**
Rolling elements	**single-row ball bearing**