CASTOMER

DATASHEET

Deep groove ball bearing 6213-2RSC3 TIMKEN

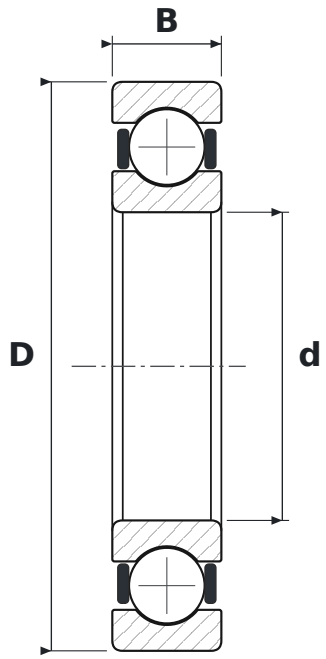

DIMENSIONS

d	bore diameter	**65 mm**
D	outside diameter	**120 mm**
B	width	**23 mm**

WHAT 6213-2RSC3 MEANS

62	łożysko kulkowe zwykłe (6), seria średnic 2 – lekka
2RS	contact rubber seals, both sides
C3	radial clearance greater than normal

SPECIFICATIONS

Manufacturer	**TIMKEN**
Manufacturer designation	**6213-2RSC3**
Rolling elements	**single-row ball bearing**