Deep groove ball bearing 6213-ZEC3 NACHI

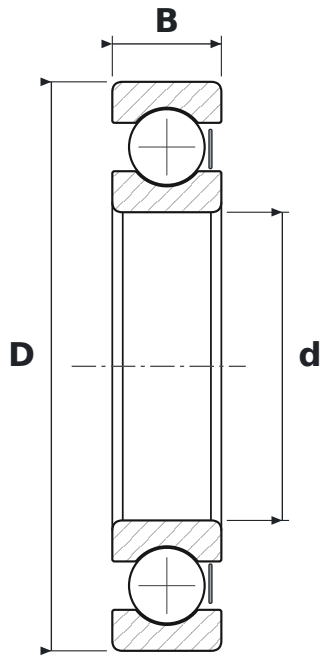

DIMENSIONS

d	bore diameter	**65 mm**
D	outside diameter	**120 mm**
B	width	**23 mm**

WHAT 6213-ZEC3 MEANS

62	łożysko kulkowe zwykłe (6), seria średnic 2 – lekka
ZE	blaszka ochronna, jednostronna
C3	radial clearance greater than normal

SPECIFICATIONS

Manufacturer	**NACHI**
Manufacturer designation	**6213-ZEC3**
Rolling elements	**single-row ball bearing**