Deep groove ball bearing 6213-2Z/C3HT SKF

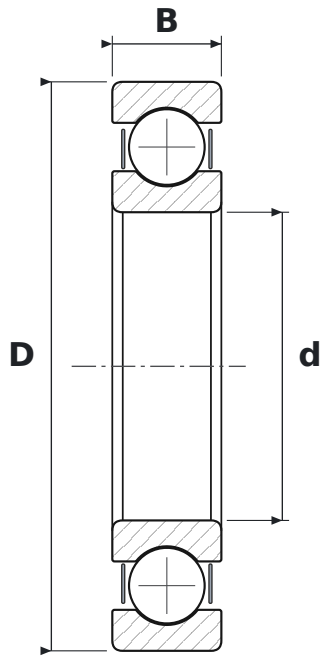

DIMENSIONS

d	bore diameter	**65 mm**
D	outside diameter	**120 mm**
B	width	**23 mm**

WHAT 6213-2Z/C3HT MEANS

62	łożysko kulkowe zwykłe (6), seria średnic 2 – lekka
2Z	steel shields, both sides
C3	radial clearance greater than normal
HT	smar o szerokim zakresie temperatur: zagęszczacz polimocznikowy, olej mineralny, NLGI 2–3

SPECIFICATIONS

Manufacturer	**SKF**
Manufacturer designation	**6213-2Z/C3HT**
Rolling elements	**single-row ball bearing**
Basic dynamic load rating C	**58.5 kN**
Basic static load rating C0	**40.5 kN**
Mass	**1.029 kg**