Deep groove ball bearing 6213 ZZCM/5K NTN

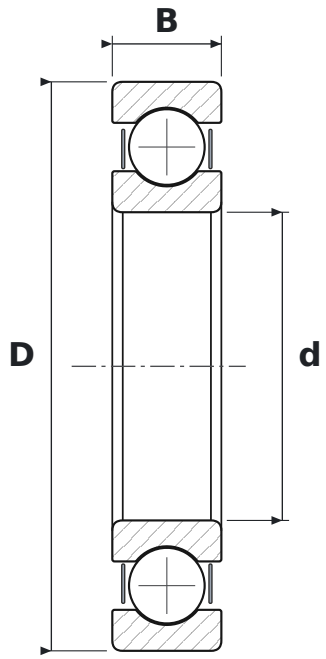

DIMENSIONS

d	bore diameter	**65 mm**
D	outside diameter	**120 mm**
B	width	**23 mm**

WHAT 6213 ZZCM/5K MEANS

62	łożysko kulkowe zwykłe (6), seria średnic 2 – lekka
ZZ	blaszki ochronne, dwustronne
CM	clearance for electric motors (quiet running)
5K	smar Kyodo Yushi Multemp SRL (od −40 do +150 °C)

SPECIFICATIONS

Manufacturer	**NTN**
Manufacturer designation	**6213 ZZCM/5K**
Rolling elements	**single-row ball bearing**